GENERAL SPECIFICATION OF
HS-5086WP DIGITAL MICRO WATER PROOF SERVO

1.TECHNICAL VALUE

CONTROL SYSTEM	:+PULSE WIDTH CONTROL 1500usec NEUTRAL	
OPERATING VOLTAGE RANGE	:4.8V TO 6.0V	
OPERATING TEMPERATURE RANGE	:-20°C TO +60°C(-4°F TO +140°F)	
TEST VOLTAGE	:AT 4.8V	AT 6.0V
OPERATING SPEED	:0.18sec/60° AT NO LOAD	0.15sec/60° AT NO LOAD
STALL TORQUE	:3.0kg.cm(41.66oz.in)	3.6kg.cm(50.0oz.in)
STANDING TORQUE	:-	-
IDLE CURRENT	:3mA AT STOPPED	3mA AT STOPPED
RUNNING CURRENT	:160mA/NO LOAD RUNNING	180mA/NO LOAD RUNNING
STALL CURRENT	:1100mA	1400mA
DEAD BAND WIDTH	:2usec	2usec
OPERATING TRAVEL	:40±5°/ONE SIDE PULSE TRAVELING 400usec	
MECHANICAL ANGLE	:180° MAX	
DIRECTION	:CLOCK WISE/PULSE TRAVELING 1500 TO 1900usec	
MOTOR TYPE	:3-POLE FERRITE CORED METAL BRUSH	
POTENTIOMETER TYPE	:2 SLIDER/500K CYCLE LONG LIFE	
DIMENSIONS	:31.0x15.2x31.0mm(1.22x0.60x1.22in)	
WEIGHT	:28.5g(1.0oz)	
BALL BEARING	:DUAL/MR52,MR106	
GEAR MATERIAL	:ALL METAL	
HORN GEAR SPLINE	:24 SEGMENTS/ø5.76	
SPLINED HORNS	:MICRO/M-I,M-O,M-X	
CONNECTOR WIRE LENGTH	:250mm(9.8in)	
CONNECTOR WIRE STRAND COUNTER	:40EA	
CONNECTOR WIRE GAUGE	:25AWG	
Duration of the test In water	:30min	

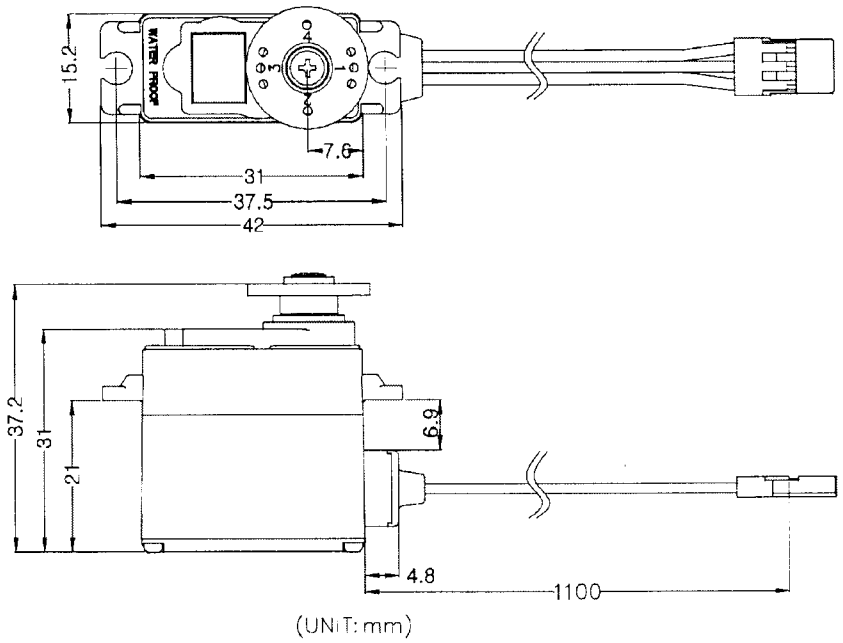

(UNIT: mm)

2.FEATURES
IP67 WATER PROOF
DUAL BALL BEARING

3.APPLICATIONS
FOR SMALL MODELS

HITEC RCD KOREA INC.